LFADJ

LFADJ Lighting
Mobile Lighting & Power

MODEL LF6132 · PORTABLE · GASOLINE GENERATOR

LF6132 LED Mobile Work Light

All-in-one portable light with its own gasoline inverter generator and 5 m electric mast. Built for power repair, construction sites, emergency rescue and railway work.

1.7 → 5 m
electric mast, up in ≤ 3 min

2 × 150 W LED
35,000 lm, lamp IP66

Gasoline · 6 h
0.7 kW inverter generator, 2.1 L tank

50 kg
modular, carried like a trolley case



Reference image

Technical Specifications

LED power	**2 × 150 W**	Generator	**Inverter generator, 0.7 kW**
Luminous flux	**35,000 lm**	Fuel type	**Gasoline**
Mast height	**1.7 m → 5 m, electric**	Fuel tank	**2.1 L**
Lifting time	**≤ 2 min (3 m) / ≤ 3 min (5 m)**	Runtime	**6 h (full tank)**
Lowering time	**≤ 2 min (3 m) / ≤ 3 min (5 m)**	Output	**AC 220 V / 50 Hz**
Protection	**IP66 lamp / IP54 lamp box**	Noise	**70 dB at 7 m**
Working temp.	**-20 °C to +40 °C**	Size (folded)	**800 × 600 × 2000 mm**
Wind resistance	**Level 5**	Weight	**50 kg**

Key Features

- Quiet gasoline inverter generator, fuel-efficient
- Generator / mains switch-over socket included
- Support legs keep it stable on slopes and uneven ground
- Modular: base and mast separate, moved like a trolley case
- Works in -20 °C to +40 °C, withstands level 5 wind

Structure

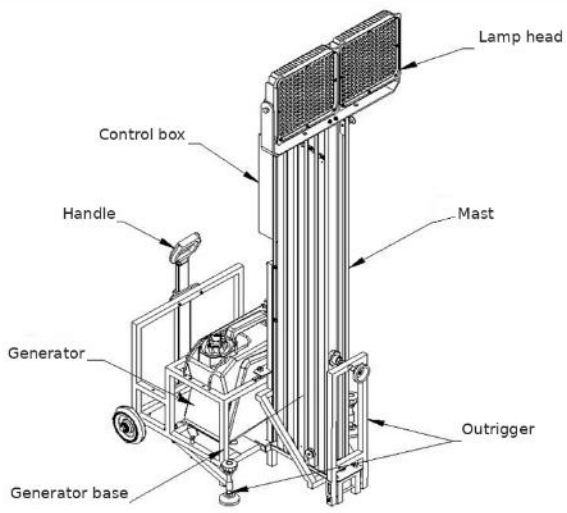

Applications

Power line repair · Construction sites · Emergency rescue · Firefighting · Railway maintenance